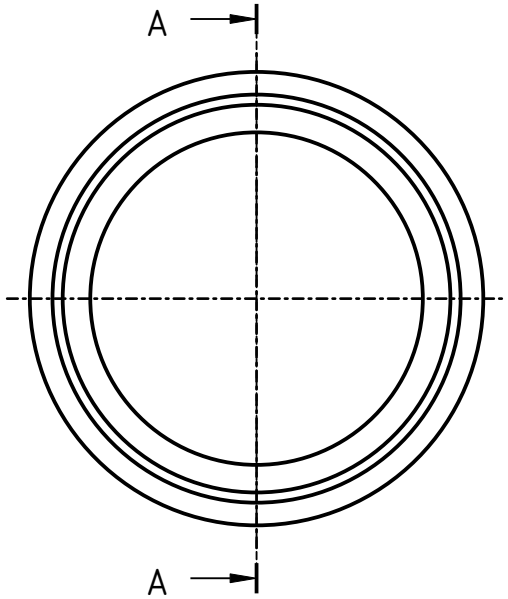

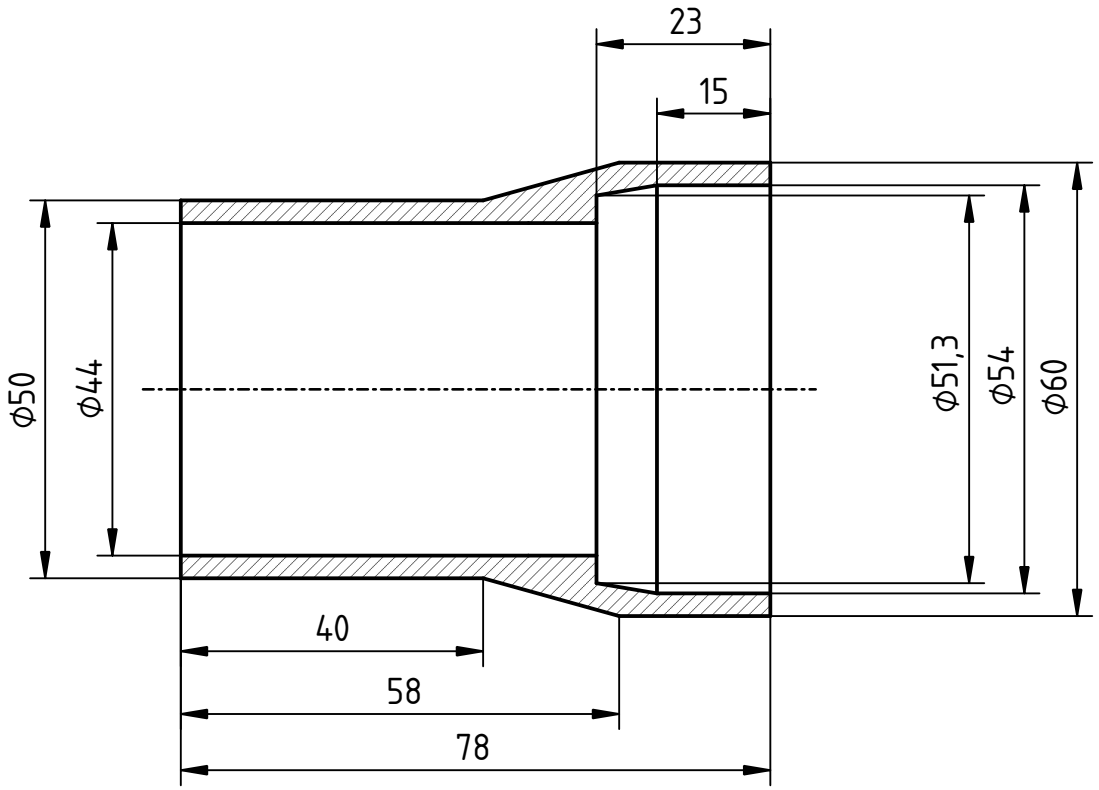

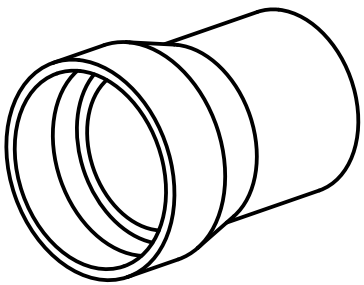

DESIGNED BY: DK9RD, Jürgen DATE: 21.11.2024		Antennenaufnahme für KAP20-Antenne		
SIZE A4				
SCALE Scale	WEIGHT (kg) Weight	DRAWING NUMBER 2	SHEET Sheet	

This drawing is our property; it can't be reproduced or communicated without our written consent.

G	_
F	_
E	_
D	_
C	_
B	_
A	_